26922

BYRON MATT CLEARSTONE BATH

Overall size 1690 x 800 x 570mm

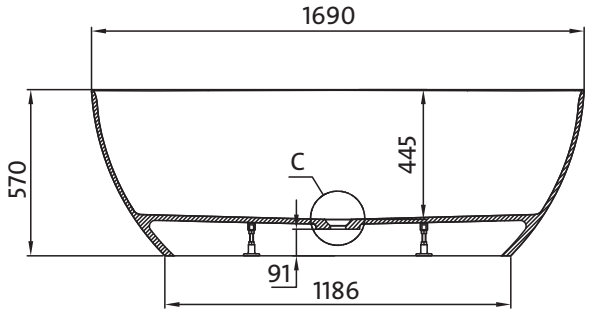

A-A

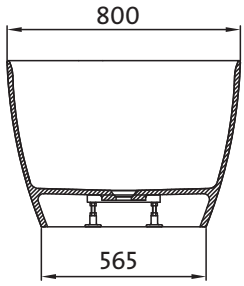

B-B

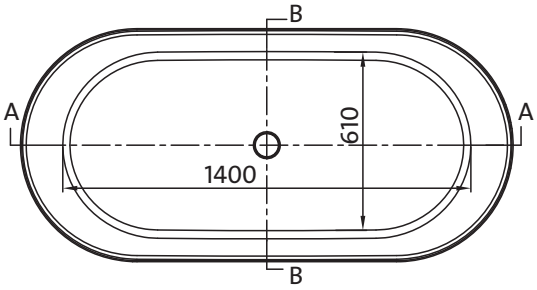

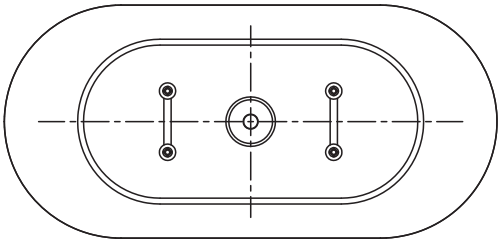

C
1:2.5

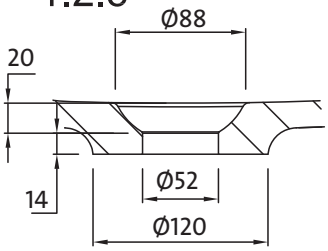

P: 1800 809 143 **E: mail@abey.com.au** **W: www.abey.com.au**

The information provided is a representation of the product depicted at this time. The designs and specifications are subject to change without notice. Prior to purchasing, please confirm all images, specifications, warranty and care instructions on our website at www.abey.com.au or contact our Customer Service Centre on 1800 809 143.