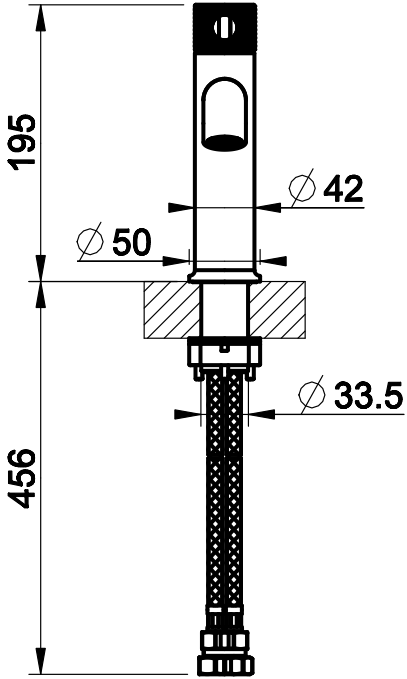
195
∅42
∅50
∅33.5
456

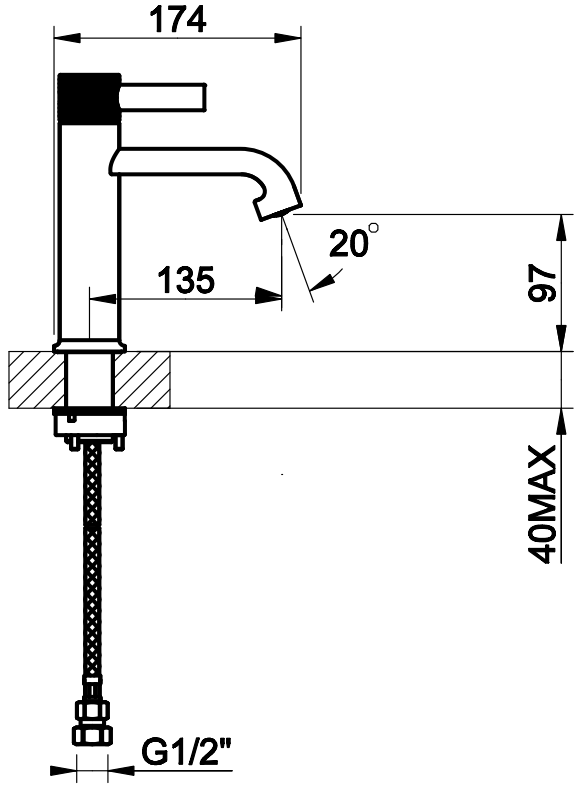
174
20°
135
97
40MAX
G1/2"