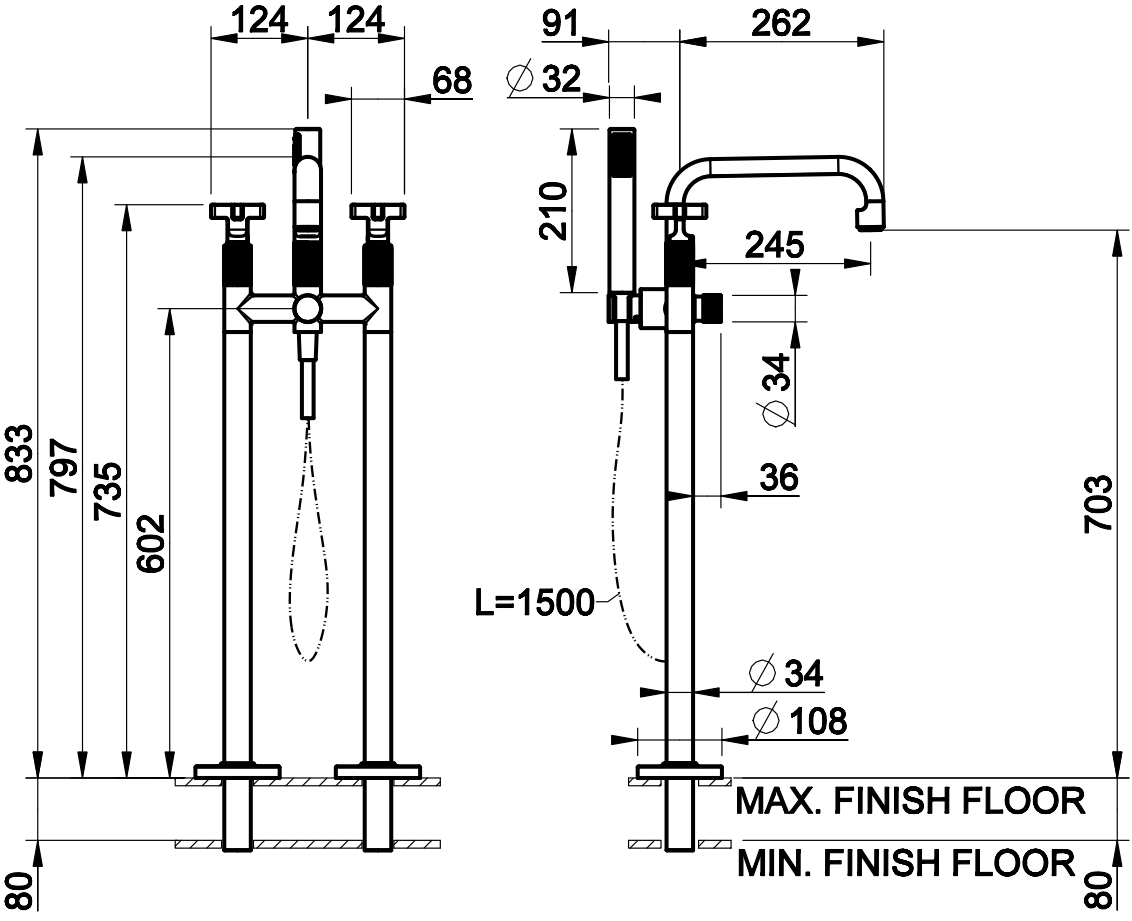
124
124
68
833
797
735
602
80
91
262
∅32
210
245
∅34
36
703
L=1500
∅34
∅108
MAX. FINISH FLOOR
MIN. FINISH FLOOR
80