Revision	Rev. Date	Changes Made
1 SB	10/09/2004	Added Profile Cut Plate, Title modified

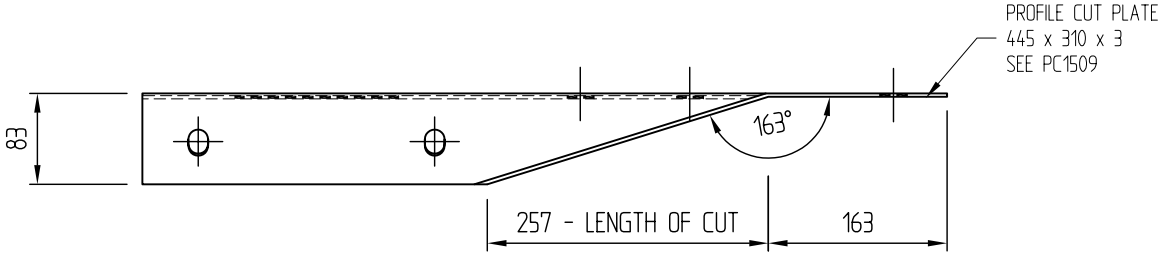

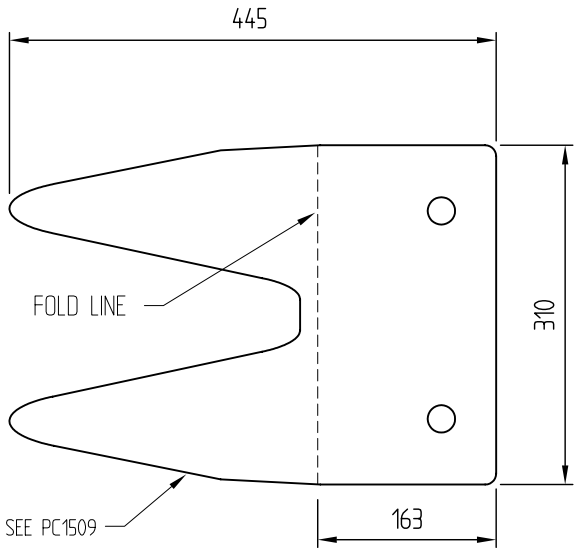

PROFILE CUT PLATE

SIZE: 450 x 310 x 3mm

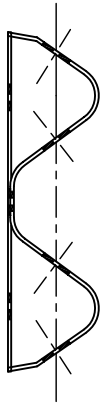

END VIEW

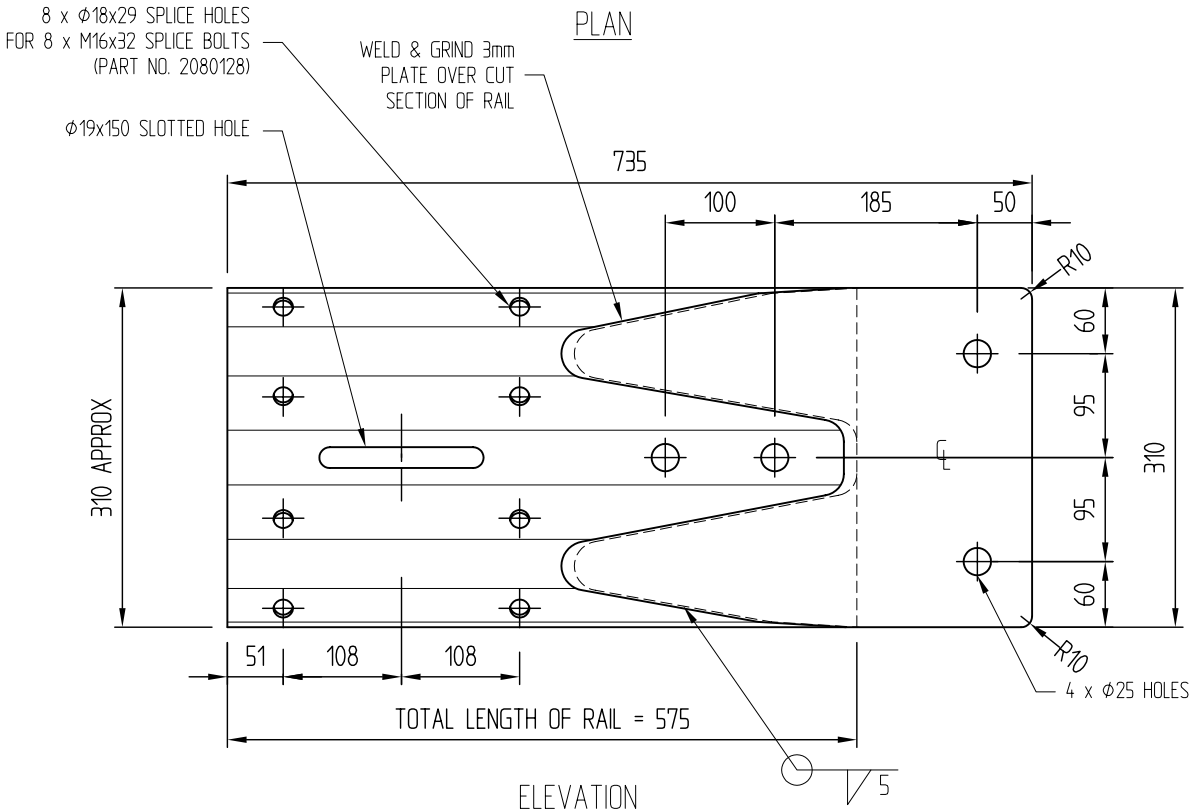

ELEVATION

NOTES:

1. GALV WEIGHT = 9.2Kg
2. WELD & GRIND 3mm PLATE OVER CUT SECTION OF RAIL ENSURING NO SHARP EDGES OR BURRS
3. ASSEMBLY INCLUDES SPLICE BOLTS FOR SPLICE BOLTS SEE FX140
4. FOR CAST-IN BRACKET DETAILS SEE FX359

CSP PACIFIC
306 Neilson Street,
Onehunga, Auckland
PO Box 12 949, Penrose
Auckland, New Zealand
Telephone 09-634 1239
Facsimile 09-634 4525
www.csppacific.co.nz

Copyright: This design, information and drawing remain the property of CSP Pacific and may not be used or copied without approval in writing from CSP Pacific.

FLEXRAIL
STRUCTURE CONNECTOR

PART No. 2080378
ASSEMBLY PART No. - 2080359

Drawn by N.MARKHAM	Date 16/03/01
Checked	Scale A4 1:7
Reference No.	
Drawing no. FX407	Rev. No. 1