Oclyte® Columns

Installation instructions

Updated March 2022

Trusted infrastructure products

1) General

Oclyte® poles are made up of tapered eight sided (octagonal) sections. The standard lengths of these sections are 3.6m and 1.8m, other lengths are possible depending on the nominal mounting height of the column. The column height is achieved by joining these sections together, the smaller end of one section slipping into the larger end of the one above. This then creates a friction joint between the two sections, the length of this joint is designed to be between 1.5 x and 1.6 x the AF (across the flats) inside dimension of the female section (Figure 1).

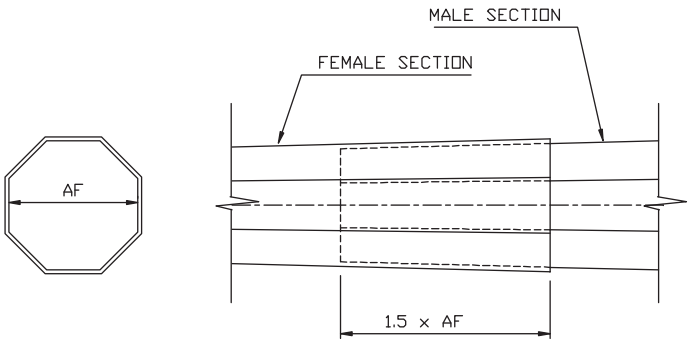

Figure 1

This friction joint is sufficient as a stand alone joint, nothing else is needed for strengthening. A silicon sealer can be used to prevent capillary action of water up through the joint. (Contact CSP for further information). The #1 section is always at the top of the column, onto which the outreach (Street light column) or cross-arm (flood light column) is attached.

Before assembly begins, ensure that you have the correct equipment and that the site has been adequately prepared.

2) Receipt of Consignment

Please check the consignment carefully to ensure that the components are correct for quantity, type and condition before signing off the consignment note or waybill.

3) Assembly Methods

There are three main methods that can be used to assemble Oclyte® columns, the type of column to be assembled will determine which method is used. The three methods are:

- **Sledge Hammer method** (refer to 5.1) – column height up to 12m & steel thickness of 2mm
- **The Strop method** (refer to 5.2) – mainly for attaching streetlight outreaches, or for column height up to 12m & steel thickness of 2mm.
- **The Winch method** (refer to 5.3) – column height above 12m or steel thickness 3mm or thicker.

Always commence the assembly with the base section. The assembly procedure requires the column to be assembled one section at a time (fully tighten each lap joint before progressing to the next section). Monitor the column at all times during assembly, to ensure it remains straight in both horizontal and vertical planes. Before assembly begins ensure that the following preparations are done:

4) Assembly Equipment

a) General (all columns):

- Wire cutters to cut pack straps
- Timber bearers
- Sledge hammer and timber packing
- Tape measure and marker pen

b) Streetlight columns incorporating an outreach arm

- All general equipment as above
- Steel wire rope[1] (the approximate length required equals the mounting height of the column plus the outreach length plus 1m)
- 2 tonne Tirfor winch[1]
- Soft strop[2]

Note[1]:
Items are optional, needed for Winch method only.

Note[2]:
Item is optional, needed for Strop method only.

c) High Masts columns 12m mounting height or higher and/or 3mm steel gauge or thicker.

- All general equipment as above
- Steel wire Rope (approximate length required equals the length of the column plus 3m)
- One or two 5 tonne Tirfor winches or rigger hoist. (two generally needed for columns 30m in height or higher and/ or 6mm steel gauge or thicker)
- Tirfor frame

5) Site Preparation

Assembly should be undertaken on a level platform and with the pole base as close as is practical to the prepared foundation.

Initial preparations

- Ensure all lap surfaces are free from obstructions e.g. dirt, stones, dents, galvanising/weld lumps etc.
- Mark out the distance (1.5 x AF) on the male section prior to assembly as a guide to the actual overlap achieved. Also make an additional mark +100mm on small columns and +200mm on large columns, which is to be used as a reference mark, in case the design lap mark is exceeded. The lap length should be between 1.5 and 1.6 times the "AF" or "across the flats" dimension of the inside of the female section at the bottom. The minimum acceptable lap is 1.4 x AF. Please contact CSP if you are unable to achieve the minimum lap.
- Support the sections on bearers and ensure that they are aligned for ease of mating.
- Ensure that each pole sections seam weld is aligned with the adjoining one. (Note that this does not necessarily apply for the joint of the top section to the outreach). When climbing rungs are supplied, make sure that these are aligned as well (right hand side rung on the upper section succeeds left hand side on the lower one or visa versa).

5.1) Sledge Hammer Method

The following procedure applies to the Oclyte® columns of approximately 12m or less in mounting height manufactured in 2mm steel gauge. For floodlight columns incorporating a cross arm, steps 6 and 7 are to be ignored.

1. Ensure initial preparations are complete as per above.
2. Place the bottom end of the bottom section against a firm support. Use timber packers in between if there is no flange (e.g. ground planted column). Start hammering the top of the second section via a timber packer. Timber packers are needed to avoid damaging (buckling) the slender walls of the column.
3. During assembly, the joint must be agitated to facilitate mating. This can be achieved by tapping around the joint area using a sledge hammer (or similar) and timber packer.
4. Ensure that the required lap is achieved.
5. Continue with the consecutive sections in the same manner, until the column is fully assembled.
6. Place the outreach against a firm supports as shown in **Figure 2**. Advance it to the top section and engage the two ends together as far as is possible ensuring that the column and the outreach are aligned straight. Support the column on timber bearers.
7. Hammer the bottom of the column using a timber packer. Push the outreach firmly against the supports (**Figure 2**) and hold it like that. This is to prevent any movement of the outreach during hammering of the sections on it.
8. The cross arm (if applicable) must be attached last.

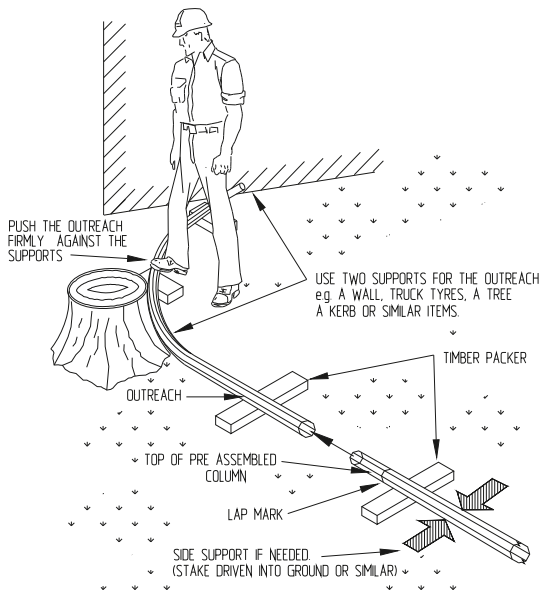

Figure 2

5.2) Strop Method

The strop method is generally only used for attaching the outreach to a fully assembled streetlight column, although the technique can be used to assemble pole sections as well.

Assemble all the sections except the outreach together using either the Sledge hammer or the Strop Method. Attach the outreach as follows:

1. Support the base of the bottom section against a firm support. Advance the outreach to the top of the top section and engage the two ends together as far as possible. Use timber packers at the bottom if there is no flange base (e.g. ground planted column).
2. Wind the strop several times around the straight portion of the outreach near the lap. Pull the strop towards the bottom of the column until the required overlap distance is achieved. During pulling, the joint must be agitated as described before.

For pulling the strop down, depending on the equipment available, there are two options:

- A hiab truck can be used and the strop can be pulled by the lifting arm (Figure 3); or
- A tirfor winch can be used for pulling the strop.

Note:

Apply the force as centrically as possible when pulling the outreach on to the column.

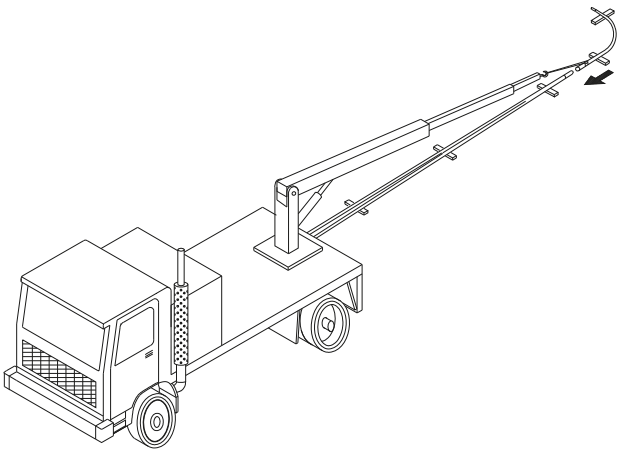

Figure 3

5.3) Winch method (for any steel gauge)

The following procedure applies to Oclyte® columns of medium and large size, i.e. approximately 12m mounting height or higher and/or 3mm steel gauge or thicker. Street lighting columns are not covered by the procedure below.

1. Assemble the tirfor and the frame at the base of the bottom section. Feed the cable through the centre looping it at the top end of the adjoining section around a rigid bar bearing on the section (**Figure 4**). Ensure that the bearing of the bar will not damage (buckle locally) the top of the section during winching (e.g. use timber packers). Also use timber packers at the bottom if there is no flange base (e.g. ground planted column).
2. During winching, if needed, the joint can be agitated to facilitate mating. This can be achieved by tapping around the joint area using a wooden hammer (or similar).
3. Continue winching until the lap is fully tight, and will close no further. Ensure that the required lap is achieved. (Stop further winching if it causes column to bow significantly, which can occur with slender columns).
4. Continue with the consecutive sections in the same manner, until the column is fully assembled.
5. The cross arm is attached last.

Note:

Monitor the column at all time during the winching procedure, to ensure it remains straight in both horizontal and vertical planes.

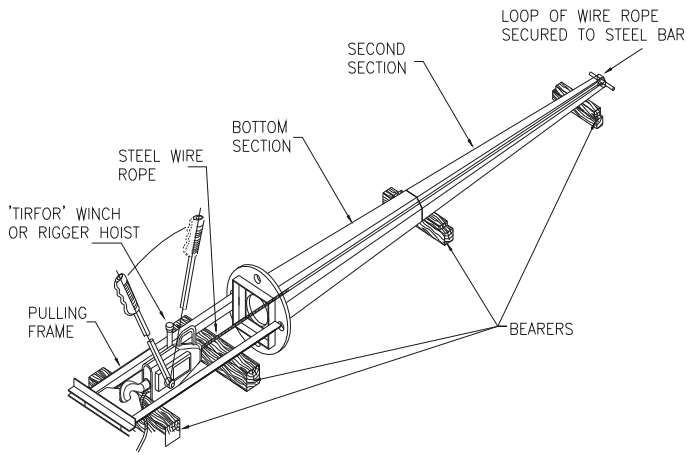

Figure 4

6) Climbing Rung assembly (if applicable)

1. Screw M24 and plain washer onto the climbing rung as far as possible.
2. Slide the other nut up the inside of the climbing rung bracket on the pole section and hold in position.
3. Screw the climbing rung all the way into the second nut in the climbing rung bracket.
4. Tighten outer nut against the climbing rung bracket until it locks the rung.

Notes:

- Always ensure that the climbing rung up-stand is vertical before tightening the nut.
- Refer to Figure 5 for the climbing rung assembly.

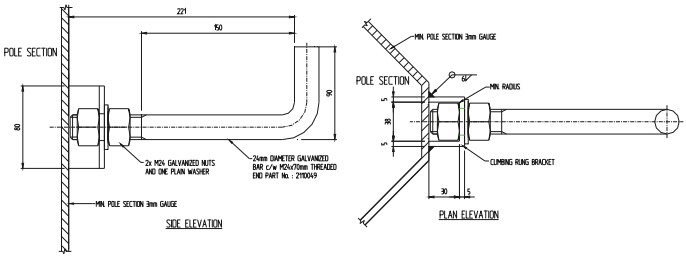

Figure 5

7) Erection / Lifting of assembled Oclyte® Columns

Two types of poles are available, ground planted and flange mounted. The latter has a flange welded to the bottom section and is either bolted to a hold down assembly (HDA) that has been cast into a concrete foundation or bolted onto the flange of a ground stub. The basic recommended erection procedure for both these are primarily the same.

7.1) Lifting Equipment

- Crane, Hiab or similar lifting machine is used to erect the column. The lifting machine should be adequate for the pole weight and length. (A 30m pole will ordinarily require a 18m jib and a rated lifting capacity of 12-15 tons).
- Web strop and/or steel wire rope or similar.
- 2 x Heavy duty spanners suitable for the holding down nuts (for flange mounted columns).
- Spirit level
- Torque wrench
- Lubricating oil for bolt threads

7.2) Preparation Prior to Erection

Prior to erection the column must be completely assembled. Use the template (if supplied) to check holding down bolts are in the correct position. Check whether all bolt and nut threads are clear and undamaged and apply small amount of lubricating oil to bolt threads. Level the lower set of nuts on the holding down bolts.

The recommended point of lifting is approximately 2/3 up the height of the pole. This is well above the centre of gravity which is approximately 2/5 of the pole height from the base. It should be noted that lifting point for some large columns with big head frames can be different from the above and special erection instructions are generally issued in such cases.

Attachment of the lifting hook to the pole can be achieved using a web strop or similar, wound twice around the octagonal section in such a manner that it will not slip upwards when lifting commences. Locating this strop just below the lap joint of a section, below a climbing rung or other attachment is advisable.

Prevent sudden jerking movements during erection as this may cause sections to loosen. This will not easily occur. As a safety precaution a cable or strop should be attached at the lifting point, then wrapped tightly around the column a few times and attached near the base. The attachment point used at the base depends on the size of the column. For smaller and medium columns, the cable can be hooked into the gear opening. For larger columns the cable should be hooked to a stronger attachment point (e.g. an earth lug at the base), (**Figure 6**).

Note:

If there is no access to the lifting point after erection, make sure that the web strop is long enough to slip down the pole after being loosened after the column is installed.

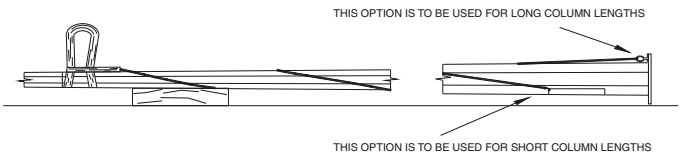

Figure 6

8) Erection procedure - Flange base

1. Mark the baseplate hole and the matching holding down bolt prior to lifting.
2. Lubricate the threads of the holding down bolts with a 'Holts lube stick' (or similar lubricant) to ensure nuts are free running.
3. Position the crane 6-8m from the centre of foundation to centre of the jib turntable. Plan the operation so that the column is lifted at approximately the same jib radius needed for placing it over the foundation (**Figure 7**).
4. Check column balance position and commence lifting slowly - slewing jib continuously or frequently, in order to keep hoisting rope vertically.
5. When column is standing almost upright, firstly hoist it clear of the ground, then lower it very slowly into position over the foundation.
6. By manual means make last positional adjustments so that holding down bolts are aligned with the correct holes.
7. Gradually ease the pole down until at least 2 nuts can be adequately engaged, taking care not to damage the threads. Do not lower further - first, slew a little to the right to bring the pole vertical.
8. Lower onto all holding down bolts and adjust levelling nuts to ensure correct pole alignment.
9. Fit the top set of nuts. Unless specified otherwise, all nuts are to be tightened to 'Snug Tight' as described in clauses 9.2 & 15.2.5.2 NZS3404 (Snug tight is the tightness that can be achieved by a person using a standard length, 450mm, Podge spanner or by a few impacts from an impact wrench).
10. After tightening to snug tight, the top nuts are to be loosened, and then retightened back to snug tight (this process ensures the Galvanised layers on the fasteners has been compressed).
11. Finally grout under the base using a non shrink grout (SIKA GROUT 212 or equivalent) unless specified otherwise.

Notes:

- Avoid sudden movements during lifting procedure, as this may cause sections to become loose (if lap joints are not fully tight) or may cause local buckling at the attachment point.
- Care is required in selecting the location of the lifting point with columns that have proportionally large attached mass at, or near the top of the column.

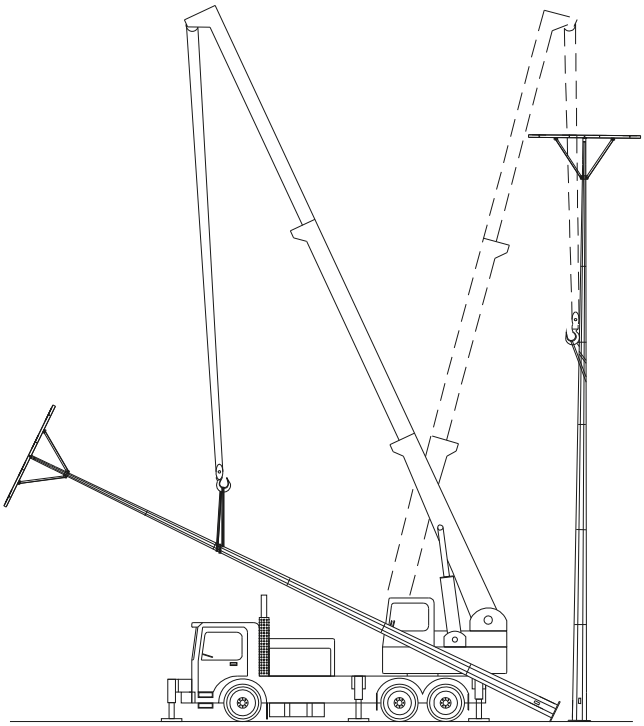

Figure 7

9) Erection procedure - Ground planted columns and columns completed with ground stubs

9.1) Foundations in cohesive soils (typically clay) – Figure 8a

The depth of the ground-planted section is indicated in column drawings. The "recommended" planting depth in column drawings applies in cohesive "Good ground" as per NZS3604 (typically firm clay). The planting depth can in most cases be reduced if column is effectively restrained at ground level by concrete slab or similar – contact CSP for more info.

CSP recommends the following:

- Uncoated ground section - use concrete as a backfill material.
- Coated ground section - use concrete or granular backfill (GAP20 or similar aggregate).
- For columns with reduced planting depth (restrained at ground level) use concrete as a backfill material.

1. The minimum diameter of the planting hole is equal to the across the flats (AF) dimension of the column at the bottom of the planted section plus 200mm, unless specified otherwise on the drawings.
2. If using granular backfill, fill the hole with GAP20 (or similar aggregate) in layers of up to 150mm loose depth and compact each layer individually by manually ramming the surface of aggregate with a 100x50 or 150x50 timber ram. Six runs of ram per layer required.
3. If using concrete (min 20MPa) backfill, fill hole with concrete and allow sufficient time for it to set before applying load.
4. Finish the backfill in a conical shape (**Figure 8a**).

9.2) Foundations in cohesionless soils (typically sands or gravels) - Figure 8b

The "recommended" planting depth in column drawings is also adequate in cohesionless "Good ground" as per NZS3604 (typically medium dense sands or gravels). Because, in general, it is not possible to drill holes for piles in cohesionless soils, the following foundation detail is to be used:

1. The minimum diameter at base of excavation is 600mm.
2. Place column inside oil drum or Formatube former and fill with concrete (min 20MPa) and allow sufficient time for it to set before applying load. Finish the concrete backfill in a conical shape (**Figure 8b**).
3. Fill the hole around column foundation with GAP40 (or similar granular aggregate) in layers of up to 150mm loose depth and compact each layer individually by manually ramming the surface of aggregate with a 100x50 or 150x50 timber ram. Six runs of ram per layer required.

Notes:

- Ground planting requirements for most Oclyte® columns will be covered by the above recommendations however, responsibility for determining the required ground planting details rests with the user. This is due to the large number of variables including diameter of the column, number and size of the attachments, wind conditions, soil conditions and the type of backfill material used.
- Do not use excavated soil for backfilling.

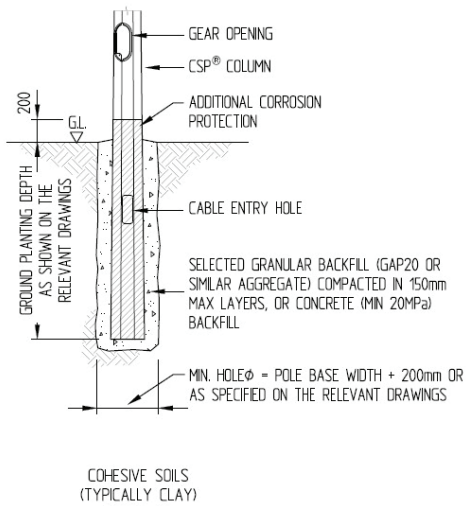

Figure 8a

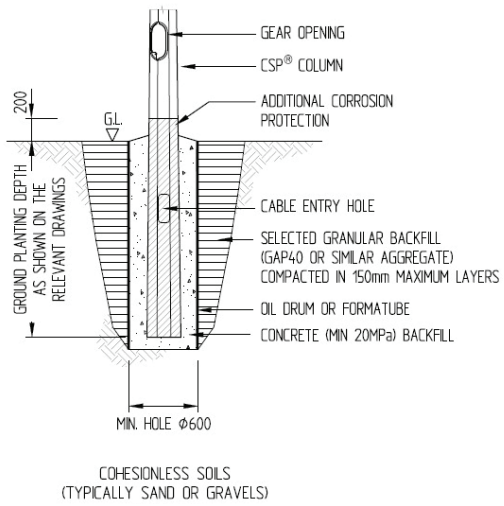

Figure 8b

10) Erection procedure – Shear base columns

For information on the erection of shear base columns see Oclyte® Shear Base Assembly, Installation and Maintenance Instructions or contact CSP.

11) Plumbing in warm weather

In warm and hot weather poles become hotter on the side facing the sun. Due to thermal expansion differences a temporary curvature of the pole could occur, which can be best seen by viewing the pole from the end. Pole plumbing in such weather conditions should be done early or late in the day.

CSP® – A member of the Fletcher Building Group

304 Neilson Street, Onehunga, Auckland 1061. PO Box 12 949, Penrose, Auckland 1642.

Ph: 0800 655 200 m: hello@csp.co.nz

CSP.CO.NZ

Trusted infrastructure products