Viarosa Maxi Wall Washer

DOWNLIGHT | MD39

mondolux.com.au

100mm

Installation Manual

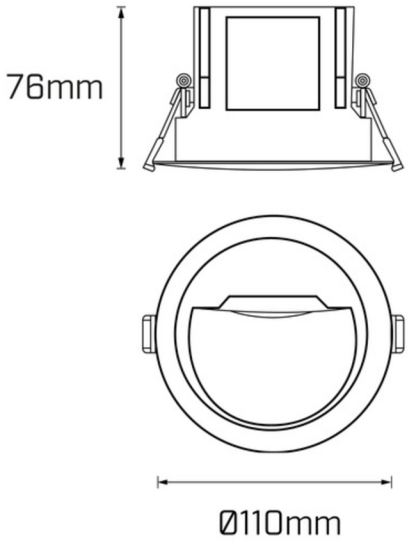

Viarosa Maxi Wall Washer MD39 Installation Manual

Important Notes

- This fitting requires 220-240V AC/50Hz power input to the driver.
- Do not interchange any parts of this fitting.
  Its recommended to have minimum space (75mm) around the fitting for air ventilation to extend the product lifetime.
- Allow a minimum distance between fitting and illuminated subject of 800mm. Do not touch fitting when in use.
- Do not install fitting near any heat source.
- Do not install any inductive loads such as exhaust fans etc. within the same lighting circuit of the current fitting. Issues caused by such connections will not be covered under our warranty policy.

If you have questions about the installation of this product, please contact Mondolux.

Viarosa Maxi Wall Washer

DOWNLIGHT | MD39

MONDOLUX™

mondolux.com.au

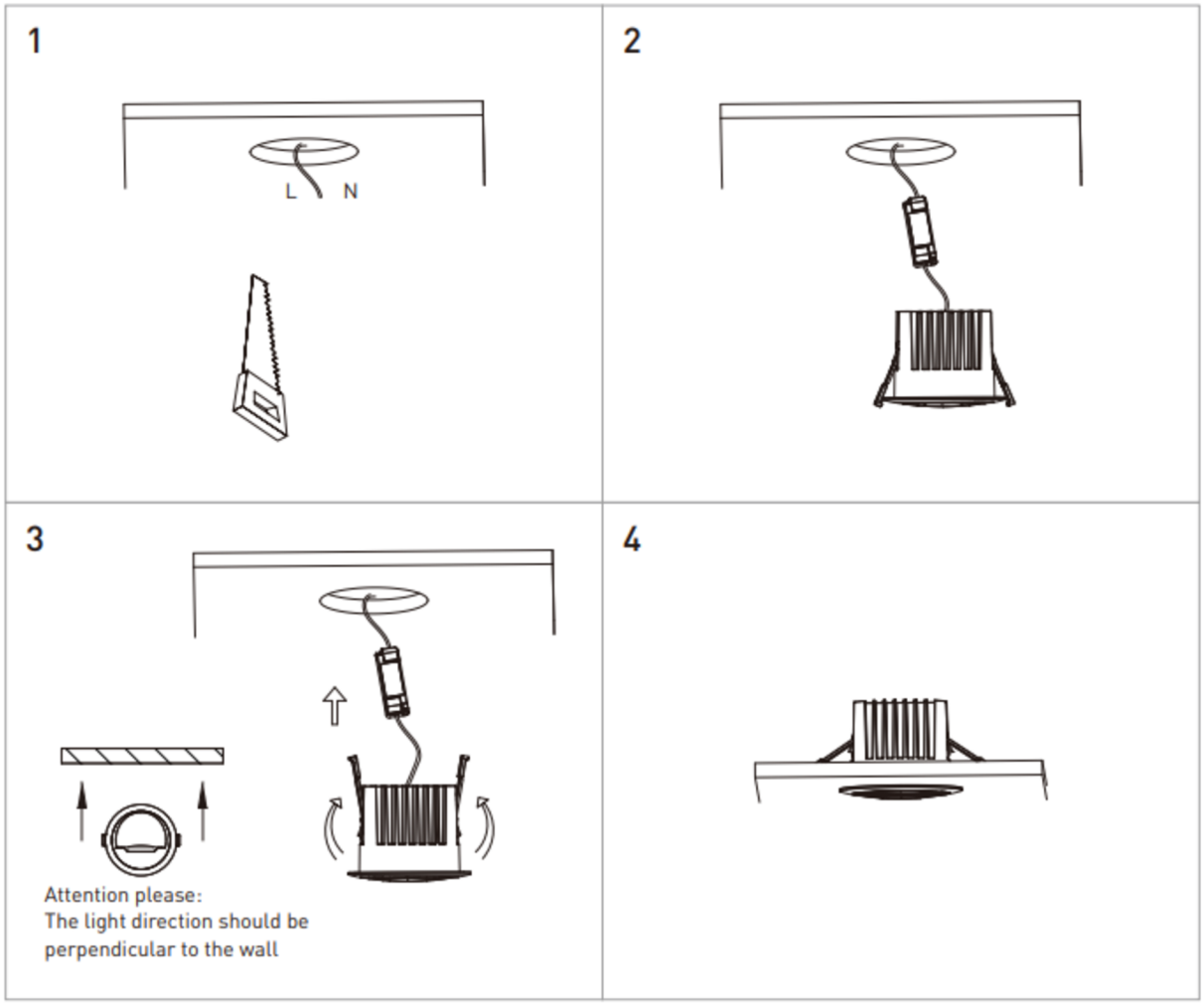

Installation Steps

1. Ensure the mains power is turned off.
2. Cut required holes in ceiling. Ensure minimum space requirements between fitting and driver. See Picture 1.
3. Pass the driver power supply wires through the cutout and plug into mains socket. Connect the driver to the light fitting using the quick connector. See Picture 2.
3. Mount fitting into ceiling and secure using the spring clips. See Picture 3.
4. Switch on the mains. Installation is complete.